SBLF200-SERIES
SALF200-SERIES

LIGHT DUT,CAST IRON HOUSINGS

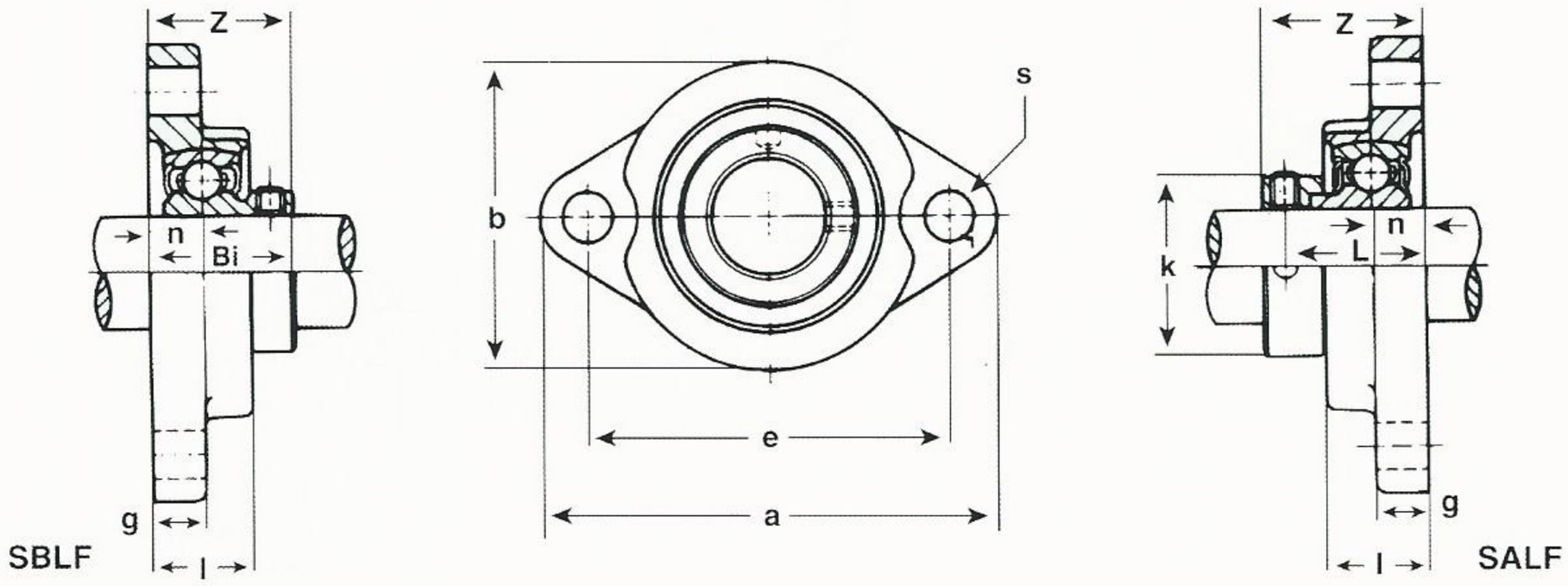

SBLF200-SERIES SET SCREW TYPE

SAS Unit No	Shaft Dia. (Inch)	Dimensions(inch)									Bolt size inch	Bearing No.	Housing No.	Weight	
		a	e	g	l	s	b	z	Bi	n				Kg	lbs.
SBLF201-8 SBLF202-10	1/2 5/8	3-3/16	2-1/2	3/8	23/32	5/16	2-7/32	1	0.866	0.236	1/4	SB201-8 SB202-10	LF203	0.27	0.60
SBLF204-12	3/4	3-17/32	2-13/16	7/16	25/32	25/64	2-13/32	1-5/32	0.984	0.275	5/16	SB204-12	LF204	0.30	0.66
SBLF205-14 SBLF205-15 SBLF205-16	7/8 15/16 1	3-3/4	2-63/64	7/16	25/32	25/64	2-17/32	1-3/16	1.062	0.295	5/16	SB205-14 SB205-15 SB205-16	LF205	0.39	0.86
SBLF206-17 SBLF206-18 SBLF206-19 SBLF206-20	1-1/16 1-1/8 1-3/16 1-1/4	4-7/16	3-9/16	15/32	7/8	15/32	3	1-11/32	1.181	0.315	3/8	SB206-17 SB206-18 SB206-19 SB206-20	LF206	0.56	1.23
SBLF207-20 SBLF207-21 SBLF207-22 SBLF207-23	1-1/4 1-5/16 1-3/8 1-7/16	4-13/16	3-15/16	33/64	15/16	15/32	3-1/2	1-7/16	1.259	0.335	3/8	SB207-20 SB207-21 SB207-22 SB207-23	LF207	1.77	1.70

SALF200-SERIES ECCENTRIC LOCKING COLLAR TYPE

SAS Unit No	Shaft Dia. (Inch)	Dimensions(inch)										Bolt size inch	Bearing No.	Housing No.	Weight	
		a	e	g	l	S	b	z	L	n	k				Kg	lbs.
SALF201-8 SALF202-10	1/2 5/8	3-3/16	2-1/2	3/8	23/32	5/16	2-7/32	1-1/4	1.125	0.256	1-1/8	1/4	SA201-8 SA202-10	LF203	0.30	0.66
SALF204-12	3/4	3-17/32	2-13/16	7/16	25/32	25/64	2-13/32	1-3/8	1.218	0.295	1-1/4	5/16	SA204-12	LF204	0.34	0.75
SALF205-14 SALF205-15 SALF205-16	7/8 15/16 1	3-3/4	2-63/64	7/16	25/32	25/64	2-17/32	1-3/8	1.218	0.295	1-1/2	5/16	SA205-14 SA205-15 SA205-16	LF205	0.44	0.97
SALF206-17 SALF206-18 SALF206-19 SALF206-20	1-1/16 1-1/8 1-3/16 1-1/4	4-7/16	3-9/16	15/32	7/8	15/32	3	1-17/32	1.406	0.354	1-3/4	3/8	SA206-17 SA206-18 SA206-19 SA206-20	LF206	0.64	1.41
SALF207-20 SALF207-21 SALF207-22 SALF207-23	1-1/4 1-5/16 1-3/8 1-7/16	4-13/16	3-15/16	33/64	15/16	15/32	3-1/2	1-11/16	1.531	0.374	2-3/16	3/8	SA207-20 SA207-21 SA207-22 SA207-23	LF207	0.92	2.03